# Yoswit Smart Outlet Datasheet

Model: YO512eu-IR (R2W) Revised: 01-12-2024



## Elevate Your Home with Intelligent Appliance Control

Yoswit Smart Outlet with IR is equipped with a built-in IR emitter, enabling you operate your infrared devices though our Yoswit app, instantly converting conventional appliances into smart ones. Accurately monitor the electricity usage for increased efficiency and enjoy enhanced safety with overload protection. Schedule devices effortlessly with built-in timer, and experience remote control before arrival and smart speaker integration via the built-in WiFi. Use it independently or as a smart gateway, seamlessly integrating with Yoswit's other smart products for a fully connected and intelligent home experience.

Connection:

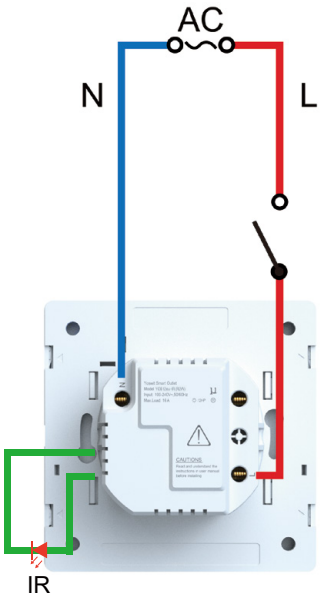


### Key Features and Benefits

- Built-in IR Emitter Allows Operation of Infrared Devices
- Real-time Monitor the Electricity Usage
- Overload Protection
- Prevent Mistakenly Touching
- Schedule Devices Using Built-in Timer
- Outdoor Remote Control via Yoswit App
- Central Hub for Smart Devices
- Compatible with the Entire Family of Yoswit Products
- Bluetooth Mesh & Wifi Enhance Connectivity and Extend Range

### Various Customized Products

We offer a comprehensive selection of smart home products that are seamlessly adapted to the usage standards and various socket types in different countries, ensuring a smooth installation process for all users. With extensive compatibility, our products enable you to control a diverse range of household appliances, including lighting, air conditioning, and TV.

Light Switch | Dimmer Switch | 2 Way Switch | Double Pole Switch | Gate Controlled Switch | Hidden Controlled Switch | Outlet | Roller | Curtain | Remote Control | Thermostat

## Yoswit App

You can download our app to implement the following functions via Bluetooth and WiFi to control the Yoswit switches.




SCAN THE QR CODE TO DOWNLOAD
YOSWIT APP

# Product Specifications

Color Option:

*You can also customize the colors



White

Specifications:

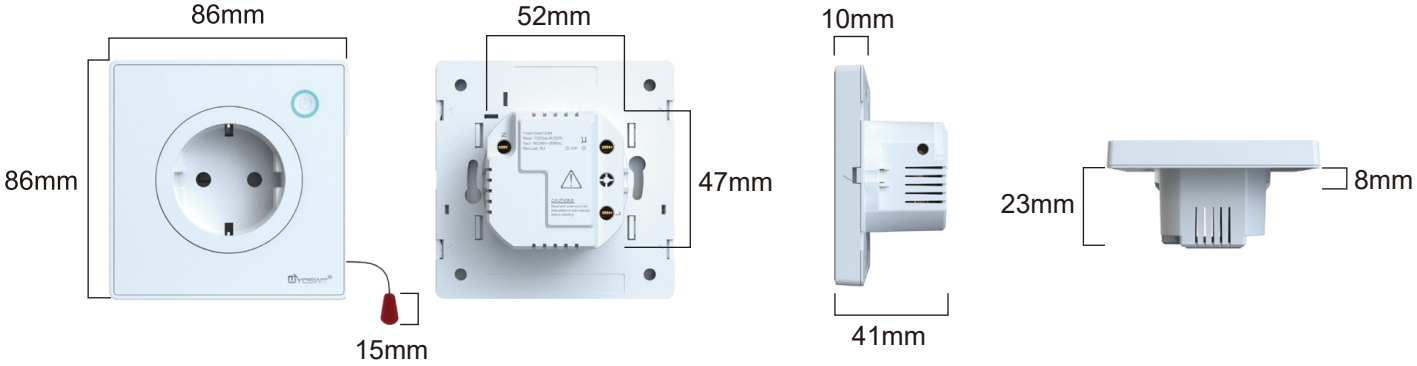


| Electrical | |
|---|---|
| Operation Power | 100-240V AC (50/60Hz) |
| Power Consumption | ≤1W |
| Max. Load | 13A / 1.5HP |
| Power Measurement Accuracy | ±3% |

| Wireless | |
|---|---|
| Frequency | 2.4GHz |
| Connection | Wifi 2.4G / BLE 4.2 |
| Range | Open Area: >50m / Interior: 3-20m |

## General Specifications

| | |
|---|---|
| Product Name | Yoswit Smart Outlet |
| Model | YO512eu-IR (R2W) |
| Socket Type | Socket 86 |
| EAN / UPC | EAN: 0765756498029 / UPC: 765756498029 |
| Revision | V7.0 |
| Compliance | CE, FCC, RoHS |
| Manufacturer | Designed by Yoswit in Hong Kong, China / Assembled in Guangdong, China |
| Warranty | Two Year Limited Warranty (*Details available on the Product Warranty and Limitations of this datasheet) |

## Mechanical

| | |
|---|---|
| Operating Temperature | -10°C to 40°C |
| Operating Humidity | 0-95% RH, Non-Condensing |
| Operating Environment | Interior |
| Operation | APP / Manual |
| Ingress Protection (IP) | 20 |
| Plug Type | EU |
| IR Emitter | 2M Length |

## Product Package

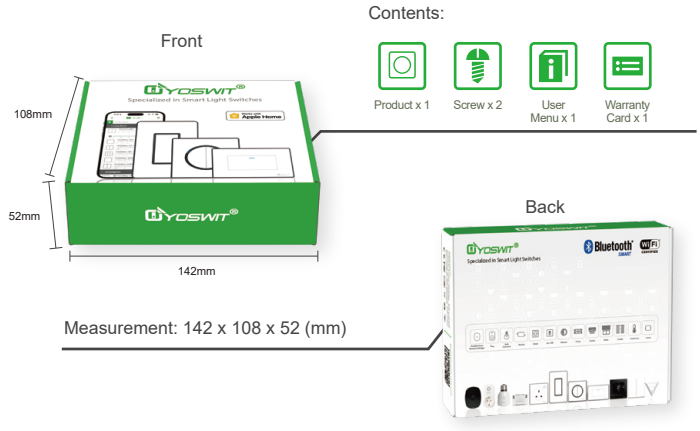


## Outer Box



Quantity Per Box: 40 Pack / Box
Measurement: 58 x 31 x 23.5 (cm)

## Product Warranty and Limitations

Yoswit brand products guarantee for a period of 2 years warranty from the date of purchase. During the warranty period and in the event that a defective product is identified (non-human factors), Yoswit will provide free maintenance. Damage beyond the warranty period or caused by improper use is not covered within the warranty, Yoswit will not bear any responsibility for repair, and will still provide users with a lifelong maintenance of paid services. If the products need to be repaired or returned to our company, an appropriate fee should be charged based on specific situation to cover the cost of replacement. Regardless of the warranty status, all shipping costs are borne by users.

LINCONG TECHNOLOGY CO. LIMITED

Address: Room 202, 2/F, Building No. 19 West Science and Technology Avenue, Science Park, Shatin, N.T., Hong Kong
info@yoswit.com | Tel: (852) 3996 9396 | Fax: (852) 3119 8778 | www.yoswit.com